Instruction Manual

Double Acting, Hydraulic Collar Thread Cylinders – RD Series

Maximum Operating Pressure – 10,150 psi

DURAPAC USA Inc.
info@durapac.com
2857 Basswood Blvd, STE 541, Fort Worth TX 76131 USA
Phone: 682 353 4006

This is a safety alert symbol. It is used to alert you to potential personal injury hazards. Obey all safety messages that follow this symbol to avoid injury or death

1.0 Product Information

DURAPAC – Hydraulic Cylinders are engineered to meet ANSI/ASME B30.1 Standards for Performance and Safety. The RD Series is a versatile and heavy duty, double acting, collar thread design cylinder for use in industrial applications requiring high power and precise positioning of heavy loads.

All RD Series cylinders can be used in high working cycle applications and are perfect for bridge lifting, hydraulic presses, construction and maintenance applications. Cylinder body mounting threads and metric base mount holes on most models allow greater mounting flexibility. All cylinders have a hard chrome piston rod, a bronze overlay on the piston bearing area and a safety valve in the retract side of the cylinder to prevent damage in case of accidental over-pressurization. As well as this, they also have an interchangeable, hardened grooved saddle.

Special skill, knowledge and training may be required for a specific task and the product may not be suitable for all jobs. The user must ultimately make the decision regarding suitability of the product for any given task and assume the responsibility of safety for all in the work area. Contact a Durapac representative if you are unsure of your cylinder's suitability for a particular application.

2.0 Receiving Instructions

It is recommended prior to use that an inspection be done by qualified personnel and that any missing or damaged parts, decals, warning/safety labels or signs are replaced with Durapac authorized replacement parts only. Any cylinder that appears to be damaged in any way, is worn, leaking or operates abnormally should be removed from service immediately until such time as repairs can be made. Any cylinder that has been or suspected to have been subject to a shock load should be removed from service immediately until inspected by a Durapac authorized service center. Owners and operators of this equipment should be aware that the use and subsequent repair of this equipment may require specialized training and knowledge.

3.0 Safety

Save these instructions. For your safety, read and understand the information contained within. The owner and operator should understand this product and safe operating procedures before attempting to use this product. Instructions and safety information should be conveyed in the operator's native language before use of this product is authorized. Make certain that the operator thoroughly understands the inherent dangers associated with the use and misuse of the product. If any doubt exists as to the safe and proper use of this product as outlined in this factory authorized manual, remove from service immediately.

DANGER:

- To avoid personal injury, keep hands and feet away from work area during operation
- **Do NOT** handle pressurized hoses. Escaping oil under pressure can penetrate the skin causing serious injury. If oil is injected under the skin, see a doctor immediately

- Stay clear of loads supported by hydraulics. A cylinder, when used as a load lifting device, should never be used as a load holding device. After the load has been raised or lowered, it must always be blocked mechanically
- To avoid personal injury and possible equipment damage, make sure all hydraulic components withstand the maximum pressure of 10,150 psi

WARNING:

- The system operating pressure must not exceed the pressure rating of the lowest rated component in the system. Install pressure gauges in the system to monitor operating pressure. It is your window to what is happening in the system
- Always wear protective gear when operating hydraulic equipment. The operator must take precaution against injury due to failure of the tool or work piece(s)
- **Do NOT** hold or stand directly in line with any hydraulic connections while pressurizing
- **Do NOT** attempt to disconnect hydraulic connections under pressure. Release all line pressure before disconnecting hoses
- All personnel must be clear before lowering load or depressurizing the system
- **Do NOT** attempt to lift a load weighing more than the capacity of the cylinder

IMPORTANT:

- If at any stage, the safety related decals become hard to read, these must be replaced
- Minimum age of the operator must be 18 years. The operator must have read and understood all instructions, safety issues, cautions and warnings before starting to operate the equipment. The operator is responsible for this activity towards other persons
- **Do NOT** lift hydraulic equipment by the hoses or couplers. Use the carrying handle or other means of safe transport
- Hydraulic equipment must only be serviced by a qualified hydraulic technician. For repair service, contact the Durapac authorized service center in your area. To protect your warranty, use only high quality hydraulic oil

CAUTION:

- **KEEP HYDRAULIC EQUIPMENT AWAY FROM FLAMES AND HEAT.** Hydraulic fluid can ignite and burn. Excessive heat will soften packings and seals, resulting in fluid leaks. Heat also weakens hose materials and packings. For optimum performance do not expose equipment to temperatures of 150°F (65°C) or higher. Protect all equipment from weld spatter
- No alteration should be made to this device

3.1 Hydraulic Cylinders

- **Do NOT** overload equipment. Overloading can cause equipment failure and possible personal injury
- This device is not suitable for use as a support device! As the system load is lifted, use blocking and cribbing to guard against a falling load

- **BE SURE SETUP IS STABLE BEFORE LIFTING LOAD**. Cylinders should be placed on a flat surface that can support the load. Where applicable, use a cylinder base for added stability. Do not weld or otherwise modify the cylinder to attach a base or other support
- Avoid situations where loads are not directly centered on the cylinder piston. Off-center loads produce considerable strain on cylinder and pistons. In addition, the load may slip or fall, causing potentially dangerous results
- Distribute the load evenly across the entire saddle surface. Always use a saddle to protect the piston (if one is provided).
- **USE ONLY RIGID PIECES TO HOLD LOAD**. Carefully select steel or wood blocks that can support the load. Never use a hydraulic cylinder as a shim or spacer in any lifting or pressing application
- **Never** pressurize uncoupled couplers. Only use hydraulic equipment in a coupled system

3.2 Hydraulic Hoses & Fluid Transmission Lines

- Avoid short runs of straight line tubing. Straight line runs do not provide for expansion and contraction due to pressure and/or temperature changes
- Reduce stress in tube lines. Long tubing runs should be supported by brackets or clips. Before operating the pump, connections should be tightened securely and leak-free. Over tightening can cause premature thread failure or high pressure fittings to burst
- Should a hydraulic hose ever rupture, burst or need to be disconnected, immediately shut off the pump and release all pressure. Never attempt to grasp a leaking pressure hose with your hands. The force of escaping hydraulic fluid can inflict injury
- **Do NOT** subject the hose to potential hazard such as fire, sharp objects, extreme heat or cold or heavy impact
- **Do NOT** allow the hose to kink, twist, curl, crush, cut or bend so tightly that the fluid flow within the hose is blocked or reduced. Periodically inspect the hose for wear
- Hose material and coupler seals must be compatible with the hydraulic fluid used. Hoses also must not come in contact with corrosive materials such as battery acid, creosote-impregnated objects and wet paint. Never paint a coupler or hose

FAILURE TO HEED THESE WARNINGS MAY RESULT IN PERSONAL INJURY AS WELL AS PROPERTY DAMAGE.

4.0 Installation

⚠ **DO NOT** adjust safety valve pressure – safety valve pressure is set at 10,150 psi

⚠ **WARNING:** When hoisting the cylinder, use **all** of the eye bolts. Failure to do so could cause the cylinder to drop unexpectedly. Lifting straps must be at a 45 degree or greater angle from horizontal. See Figure 1 (below)

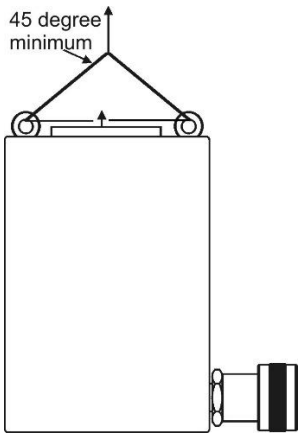

Figure 1 – Hoisting Cylinder

⚠ **IMPORTANT:** Always secure threaded port connections with high grade, non-hardening pipe thread sealant. Teflon tape can be used if only one layer of tape is used and it is applied carefully, two threads back, to prevent the tape from being introduced into hydraulic system, which could cause jamming of precision-fit parts

4.1 Know your cylinder, its limitations and how it operates before attempting to use. If in doubt, contact Durapac.

4.2 Make hydraulic connections; use a pump with a 4-way valve and two hoses for a double acting cylinder. Both couplers must be connected.

⚠ **IMPORTANT:** Fully hand-tighten all couplers. Loose coupler connections will block the flow of oil between the pump and the cylinder

4.3 Check all system fittings and connections to be sure they are tight and leak free.

4.4 Check oil level in reservoir before operating pump.

4.5 Remove air from the system – Position the cylinder on its side with the couplers facing up and the cylinder lower than the pump. Advance and retract the cylinder several times, avoiding pressure build-up. Air removal is complete when the cylinder motion is smooth.

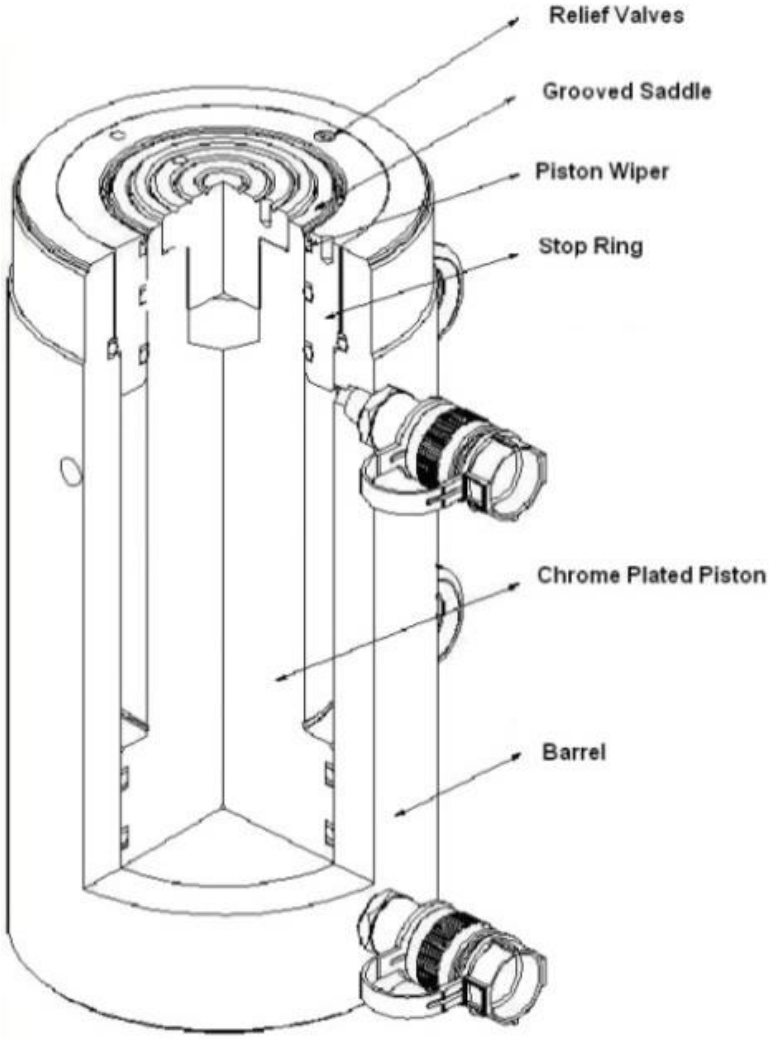

Figure 2 – RD Series Sectional Drawing

5.0 Operation

IMPORTANT:

- Collar threads are rated for the full capacity of the cylinder when fully engaged in attachments
- Cylinder gland nut/stop ring is designed to take the full load, to reduce cylinder wear, use less than the full stroke where possible
- Always use a flat, hard surface as a cylinder support plate and use a low friction material on top of the saddle

For complete operating instructions refer to the instruction sheet included with each pump.

5.1 Advancing and retracting the cylinder

Shift the valve on the pump to the advance position and run the pump to advance the cylinder. To retract the cylinder, shift the valve to the retract position.

5.2 Side Load

The maximum allowable side load at full cylinder stroke is 5% of the cylinder's rated capacity

Eliminate the presence of side load forces when using high tonnage cylinders. Side load can occur through:

5.2.1 An eccentric load on the piston rod.

5.2.2 A horizontal load on a structure.

5.2.3 A structure and/or cylinder misalignment.

5.2.4 Non synchronized lifting actions

5.2.5 Nonstable cylinder base support.

To reduce cylinder offset loading, optional swivel saddles are available. Always use grease underneath swivel saddles (see *Figure 3*).

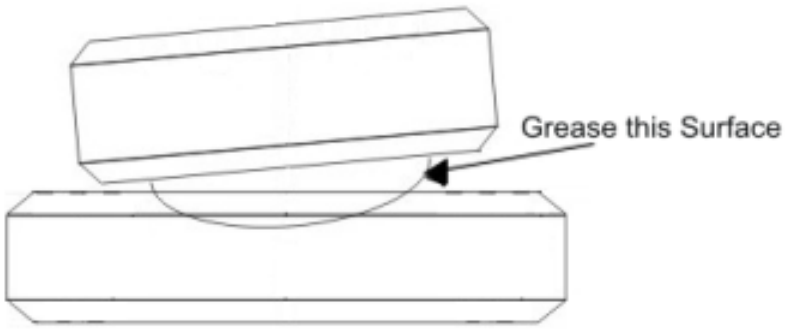

Figure 3 – Tilt Saddle

6.0 Maintenance

IMPORTANT:

- Use only good quality hydraulic fluid. **Do NOT** use brake fluid, transmission fluid, turbine oil, motor oil, alcohol, glycerin etc. Use of anything other than good quality hydraulic oil will void warranty and damage the cylinder and application. We recommend Durapac Hydraulic Oil or equivalent
- Equipment must only be serviced by a qualified hydraulic technician. For repair service, contact your local Durapac authorized service center
- Tighten connections as needed. Use non-hardening pipe thread compound when servicing connections

Dirt, sand, etc. will quickly ruin any hydraulic system. Ensure that couplings are clean and free of foreign matter. After each use, clean couplings and attach dust caps.

Maintenance is required when wear or leakage is noticed. Periodically inspect all components to detect any problem that may require service and maintenance.

6.1 Check for loose connections and leaks.

6.2 Replace damaged parts immediately.

6.3 Do not exceed oil temperature above 140°F.

6.4 Keep all hydraulic components clean.

6.5 Use dust caps when cylinder is disconnected from the hose. Keep entire cylinder clean to prolong cylinder life.

6.6 Wipe thoroughly clean and store cylinders upright (to prevent seal distortion) in a clean, dry environment. Avoid temperature extremes.

6.7 Change hydraulic oil in your system as recommended in the pump instruction sheet.

7.0 Troubleshooting

Problem	Cause	Solution
Cylinder moves but does not maintain pressure	Leaking connection	• Clean, reseal with thread sealant and tighten connection
	Leaking cylinder seals	• Replace worn seals • Check for excessive contamination or wear • Replace contaminated fluid as necessary
	Malfunctioning pump/valve	• Check pump or valve operating instructions • Repair or replace as necessary
Cylinder leaks hydraulic fluid	Worn or damaged seals	• Replace worn seals • Check for excessive contamination or wear • Replace contaminated fluid as necessary
	Loose connections	• Clean, reseal with thread sealant and tighten connection
Cylinder will not retract or retracts slower than normal	Closed pump release valve	• Open pump release valve
	Loose couplers	• Tighten couplers
	Blocked hydraulic lines	• Clean and flush lines
	Weak or broken retraction springs	• Send to a Durapac authorized service center for repair
	Internally damaged cylinder	• Send to a Durapac authorized service center for repair
	Pump reservoir too full	• Drain hydraulic fluid to correct level
Erratic Action	Air in system or pump cavitation	• Add fluid, bleed air and check for leaks
	External leakage	• Replace worn packings • Check for excessive contamination fluid as necessary • Replace contaminated fluid as necessary
	Sticking or binding cylinder	• Check for dirt or leaks • Check for bent, misaligned, worn parts or defective packings
Cylinder does not move	Loose couplers	• Tighten couplers
	Faulty coupler	• Verify that female coupler is not locked up (ball wedged into seat) • Replace both male and female couplers
	Improper valve position	• Close release valve or shift to new position
	Low or no hydraulic fluid in pump reservoir	• Fill and bleed the system

Problem	Cause	Solution
	Air-locked pump	• Prime pump according to pump operating instructions
	Pump not operating	• Check pump's operating instructions
	Load is above the capacity of the system	• Use the correct equipment
Cylinder extends only partially	Low or no hydraulic fluid in pump reservoir	• Fill and bleed the system
	Load is above the capacity of the system	• Use the correct equipment
	Sticking or binding cylinder	• Check for dirt or leaks • Check for bent, misaligned, worn parts or defective packings
Cylinder moves slower than normal	Loose couplers	• Tighten couplers
	Restricted hydraulic line or fitting	• Clean • Replace if damaged
	Pump not operating correctly	• Check pump's operating instructions • Repair or replace as necessary
	Low fluid level in pump reservoir	• Fill and bleed the system
	Leaking cylinder seals	• Replace worn seals • Check for excessive contamination or wear • Replace contaminated fluid as necessary

8.0 Parts Breakdown and List

8.1 Models - RD-308, RD-3014

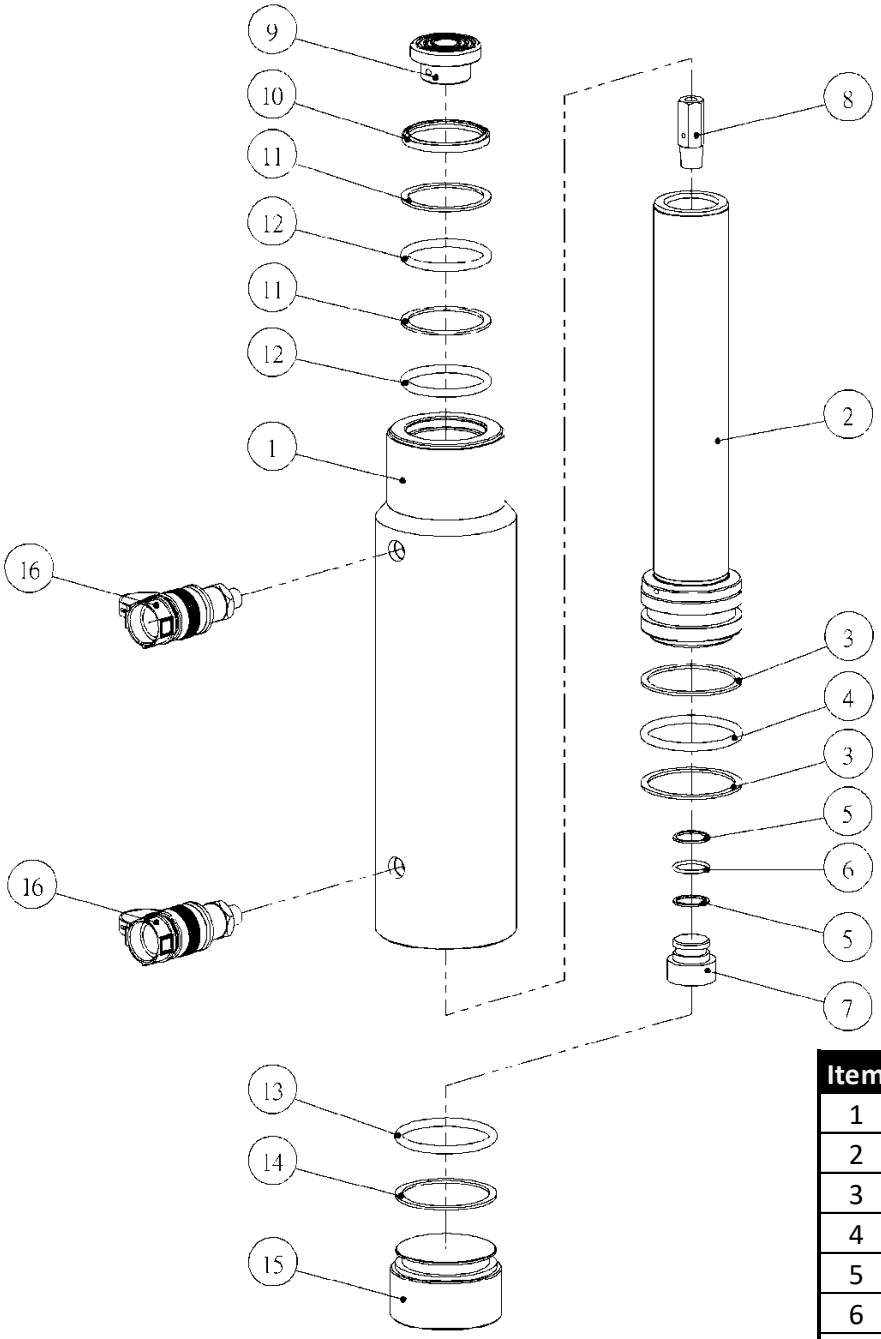

Item	Description	Qty
1	Cylinder	1
2	Piston rod	1
3	Back-up ring*	2
4	O-ring*	1
5	Back-up ring*	2
6	O-ring*	1
7	Bottom plug	1
8	Safety valve	1
9	Saddle	1
10	Wipers*	1
11	Back-up ring*	2
12	O-ring*	2
13	O-ring*	1
14	Back-up ring*	1
15	Base	1
16	Fast coupler	2

8.2 Models - RD-1502 & RD-2006

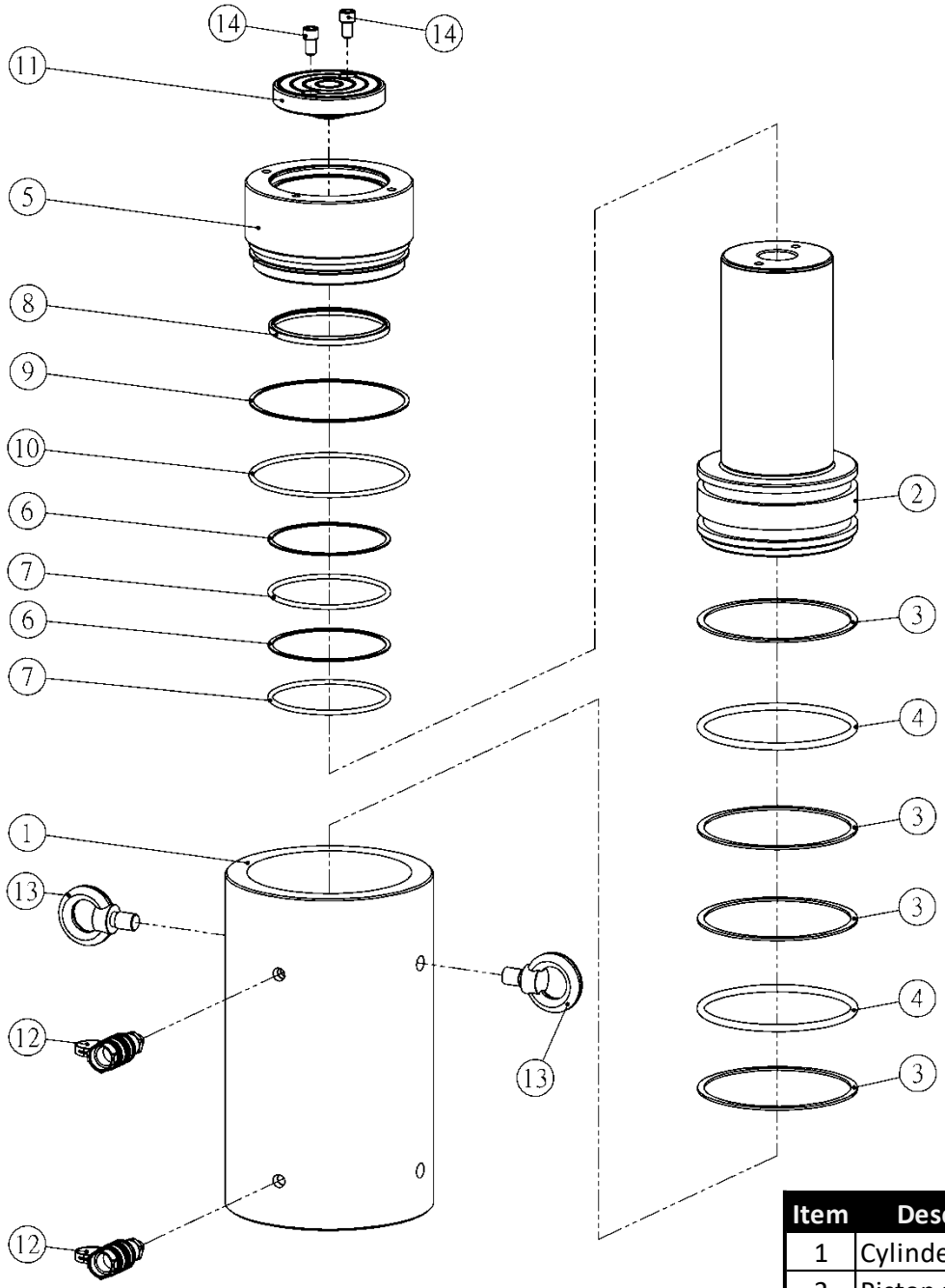

Item	Description	Qty
1	Cylinder	1
2	Piston rod	1
3	Back-up ring*	4
4	O-ring*	2
5	Gland nut	1
6	Back-up ring*	2
7	O-ring*	2
8	Wipers*	1
9	Back-up ring*	1
10	O-ring*	1
11	Saddle	1
12	Fast coupler	2
13	Lifting eye bolt	2
14	Bolt*	2

8.3 Models - RD-10013, RD-10018, RD-1006, RD-1506, RD-15013, RD-20013, RD-3006, RD-30012, RD-4006, RD-40012, RD-5006

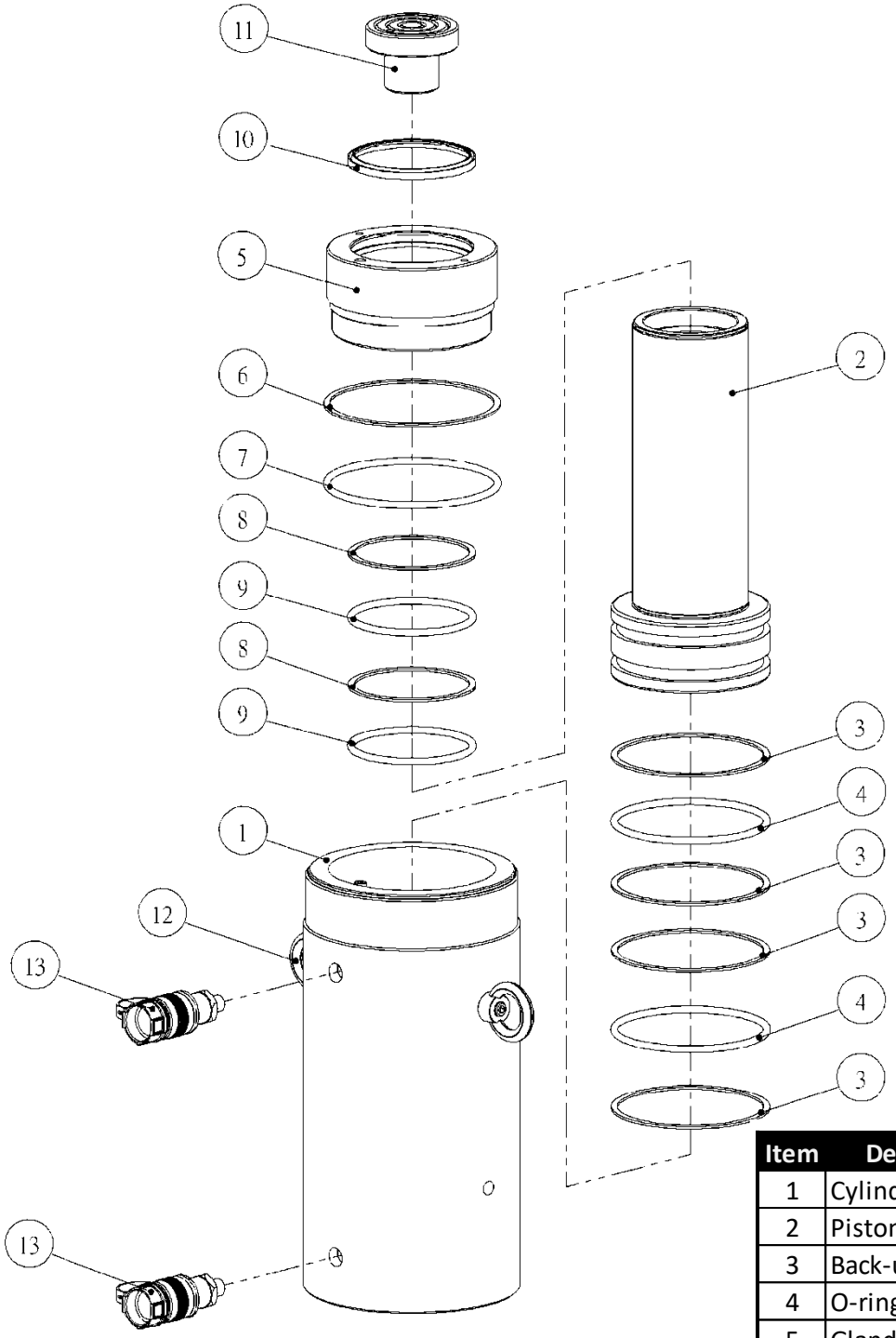

Item	Description	Qty
1	Cylinder	1
2	Piston rod	1
3	Back-up ring*	4
4	O-ring*	2
5	Gland nut	1
6	Back-up ring*	1
7	O-ring*	1
8	Back-up ring*	2
9	O-ring*	2
10	Wipers*	1
11	Saddle	1
12	Lifting eye bolt	2
13	Fast coupler	2

8.4 Models - RD-5020, RD-5013, RD-506, RD-7513, RD-756

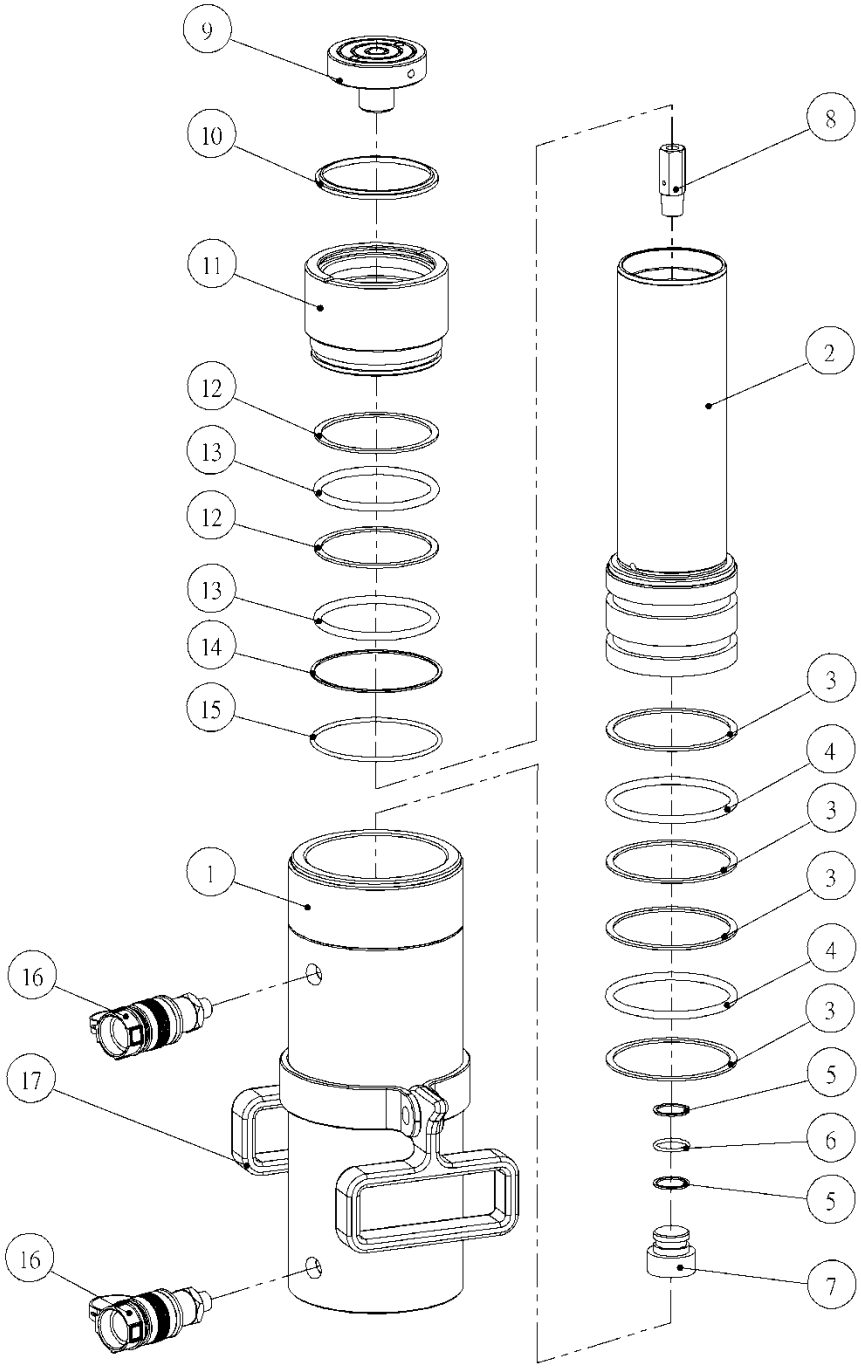

Item	Description	Qty
1	Cylinder	1
2	Piston rod	1
3	Back-up ring*	4
4	O-ring*	2
5	Back-up ring*	2
6	O-ring*	1
7	Bottom plug	1
8	Safety valve	1
9	Saddle	1
10	Wipers*	1
11	Stop ring	1
12	Back-up ring*	2
13	O-ring*	2
14	Back-up ring*	1
15	O-ring*	1
16	Fast coupler	2
17	Strap Handles	1

8.5 Models - RD-1010, RD-1012

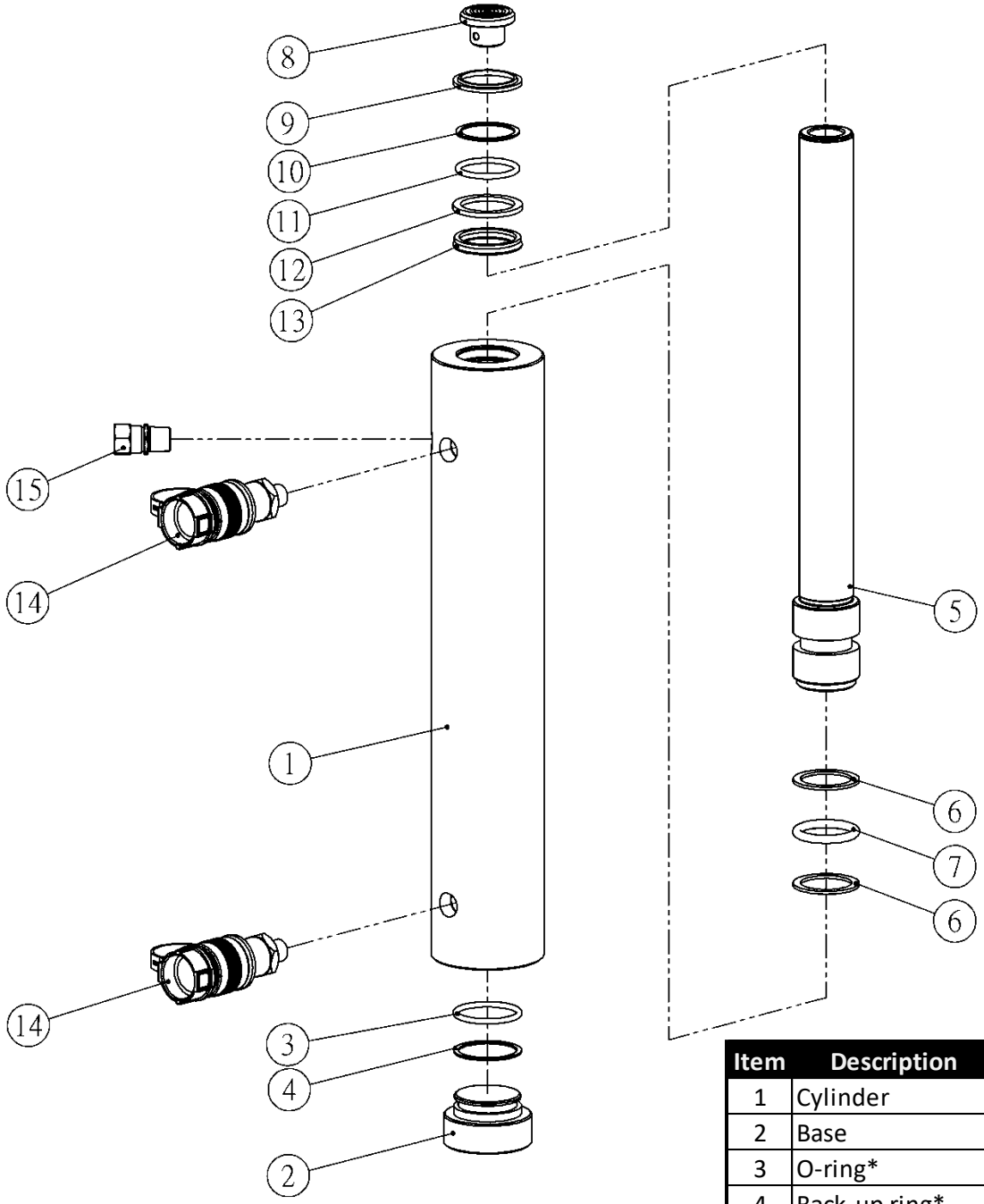

Item	Description	Qty
1	Cylinder	1
2	Base	1
3	O-ring*	1
4	Back-up ring*	1
5	Piston rod	1
6	Back-up ring*	2
7	O-ring*	1
8	Saddle	1
9	Wipers*	1
10	Back-up ring*	1
11	O-ring*	1
12	Back-up ring*	1
13	Seal	1
14	Fast coupler	2
15	Safety valve	1

8.6 Models - RD-15032, RD-20036, RD-20048, RD-30018, RD-30024, RD-30036, RD-30048, RD-40018, RD-40024, RD-40036, RD-40048

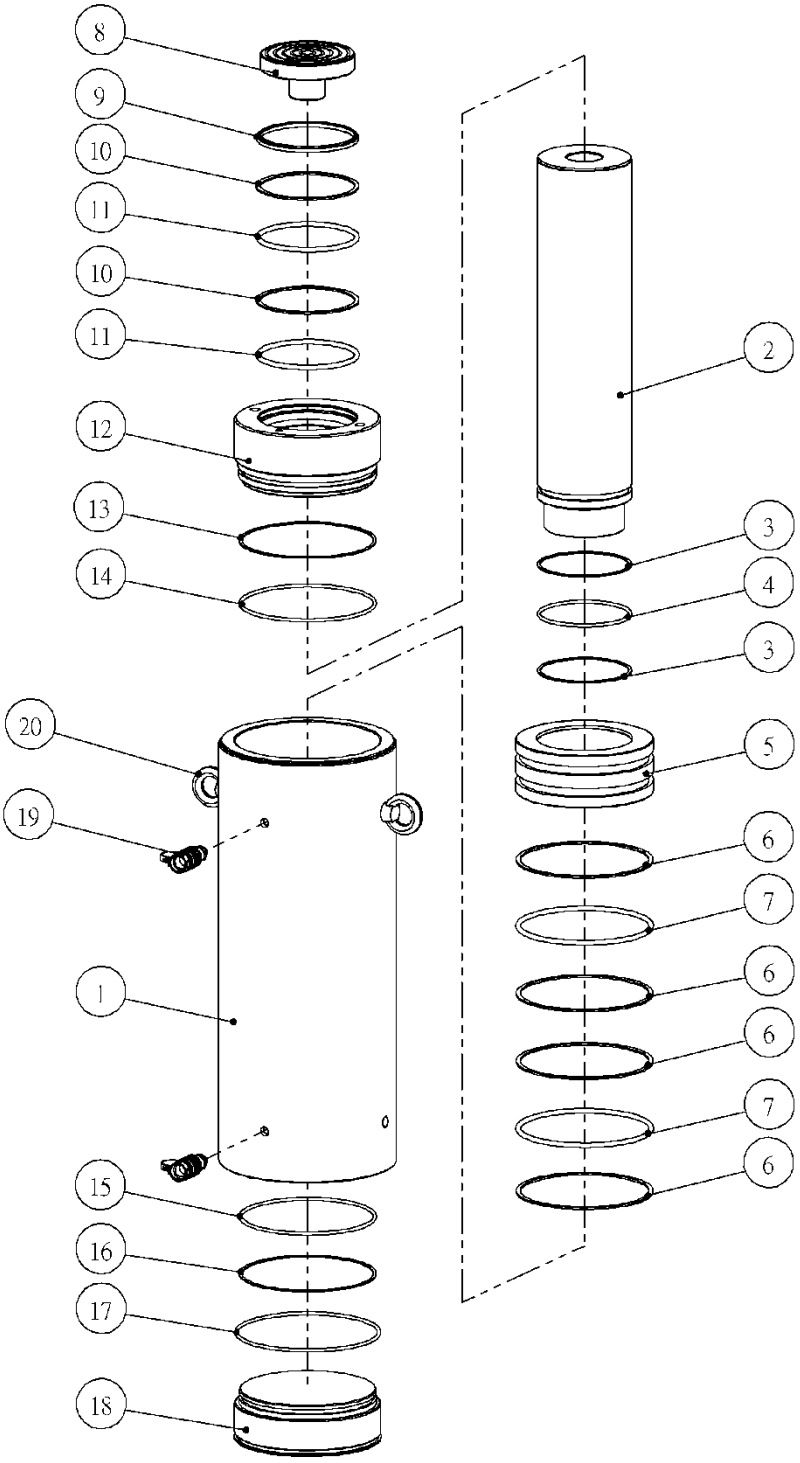

Item	Description	Qty
1	Cylinder	1
2	Piston rod	1
3	Back-up ring*	2
4	O-ring*	1
5	Piston	1
6	Back-up ring*	4
7	O-ring*	2
8	Saddle	1
9	Wipers*	1
10	Back-up ring*	2
11	O-ring*	2
12	Gland nut	1
13	Back-up ring*	1
14	O-ring*	1
15	O-ring*	1
16	Back-up ring*	1
17	O-ring*	1
18	Base	1
19	Fast coupler	2
20	Lifting eye bolt	2

8.7 Models - RD-20018, RD-20024, RD-50012, RD-50018, RD-50020, RD-50024, RD-50036, RD-50048

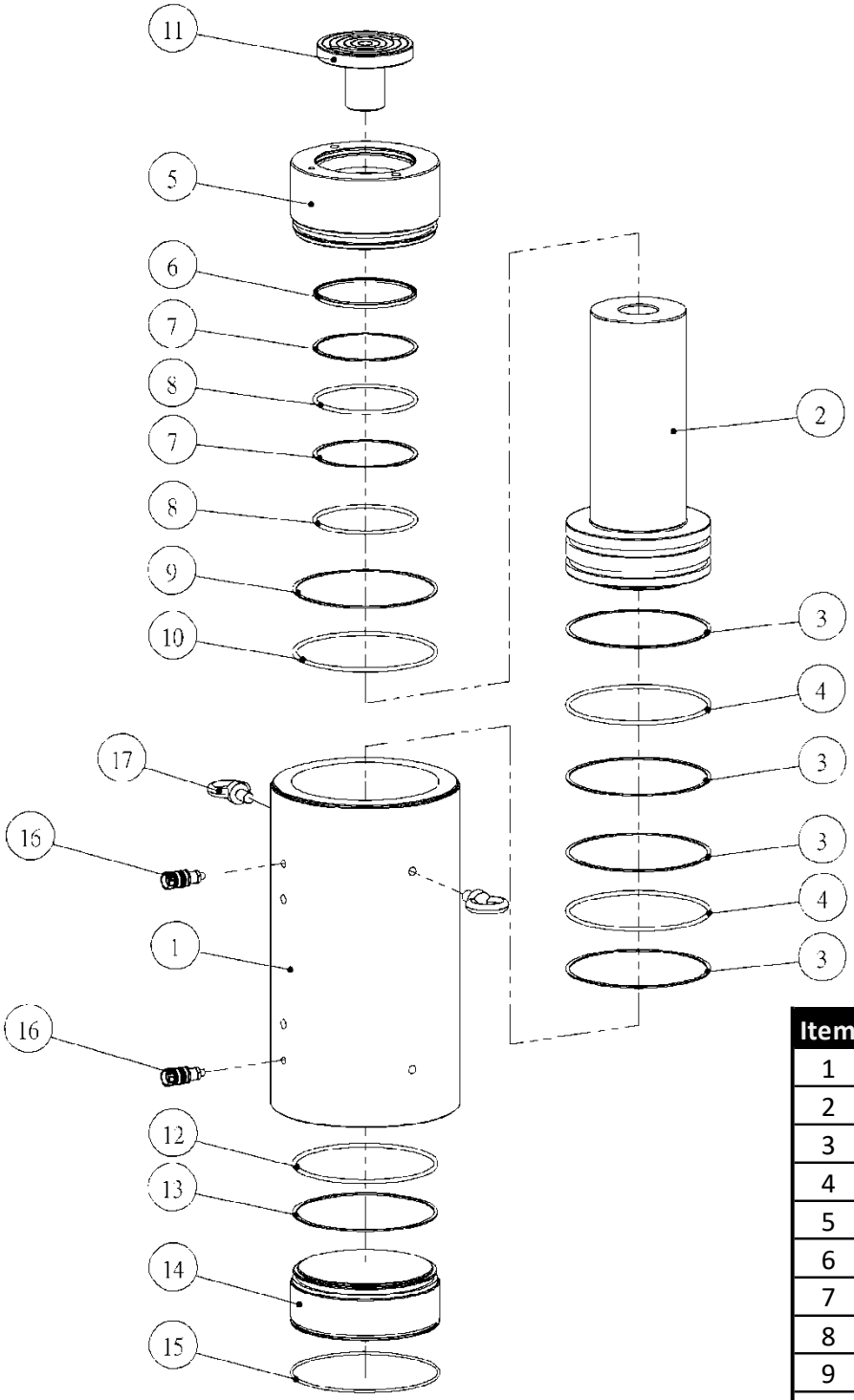

Item	Description	Qty
1	Cylinder	1
2	Piston rod	1
3	Back-up ring*	4
4	O-ring*	2
5	Gland nut	1
6	Wipers*	1
7	Back-up ring*	2
8	O-ring*	2
9	Back-up ring*	1
10	O-ring*	1
11	Saddle	1
12	O-ring*	1
13	Back-up ring*	1
14	Base	1
15	O-ring*	1
16	Fast coupler	2
17	Lifting eye bolt	2

(*) Indicates items included in and available only as part of a Repair Kit